应变传感器 Strain Sensor

SL 应变传感器

SL Strain Sensor

- Maximum capacity (Emax) 额定载荷 (kg)：300
- It can be installed on structures such as containers such as silos and tanks, and can also be used for weighing and measuring with lower accuracy. It can also be installed on equipment such as cranes, punches and rolling mills to reflect the change in force by measuring its strain.

  可将其安装于容器如料仓料罐等支撑结构上，也可用于较低精度的称重计量。还可安装在起重机、冲床和轧机等设备的支撑或受力结构上，通过测量其应变来反映所受力的变化。

外形尺寸 Dimensions(in mm)

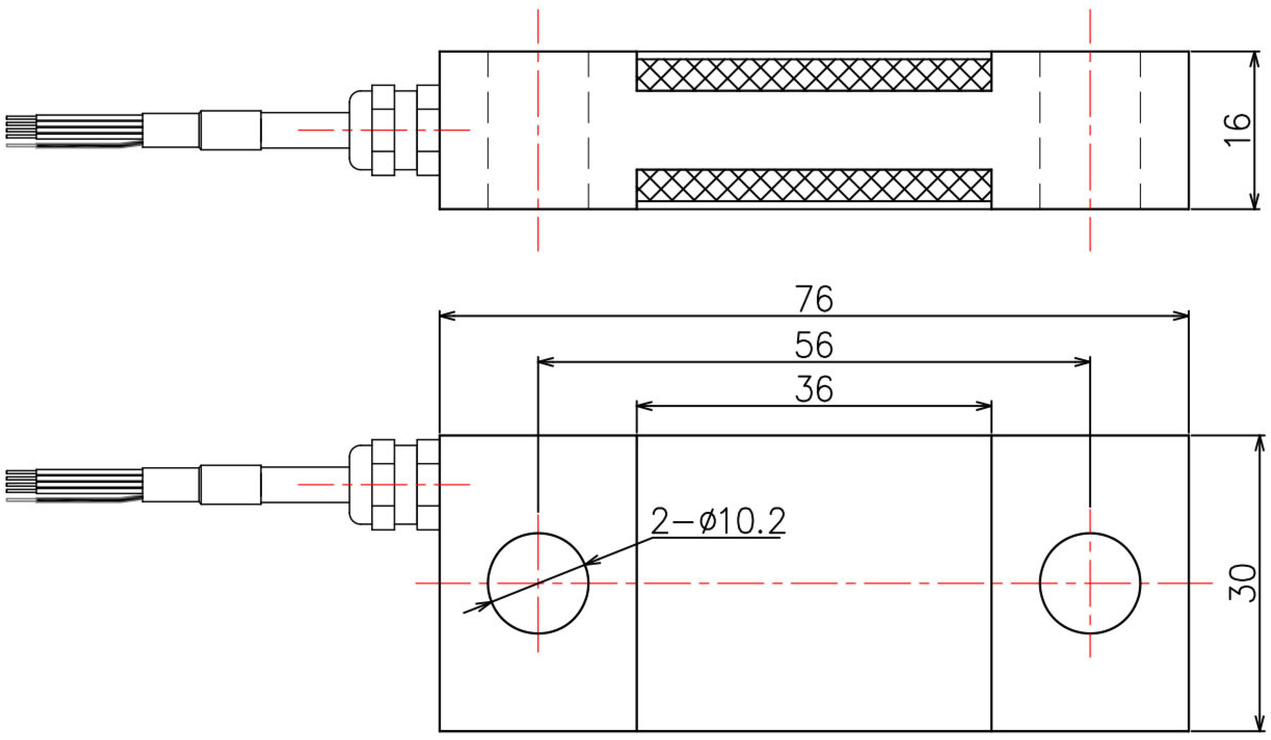

接线图 Wiring code

技术参数 Specifications

额定载荷 Rated Load	kg	300
额定输出 Rated Output	mV/V	1.0
零点输出 Zero Output	%F.S	＜2
重复性 Repeatability	%F.S	＜0.3
蠕变（30 分钟） Creep after 30 minutes	%F.S	＜0.3
推荐激励电压 Recommended excitation voltage	VDC	3-5
非线性 Nonlinearity	%F.S	＜0.5
输出阻抗 Output impedance	Ω	350±10
绝缘阻抗 Insulation resistance	MΩ	≥5000
安全过载 Safe overload	%F.S	150
极限过载 Ultimate overload	%F.S	300
弹性元件材料 Material		Stainless steel不锈钢
防护等级 Degree of protection		IP66
电缆线长度 The length of the cable	m	8